NAD 214/216

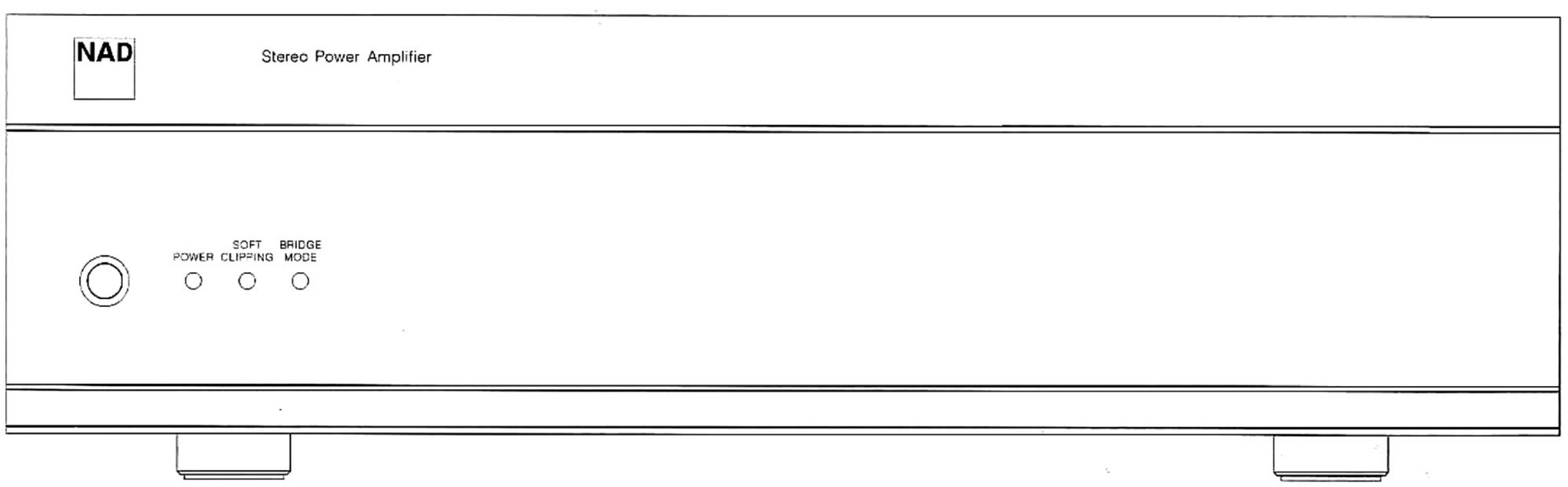

GB

• OWNER'S MANUAL

www.hifiengine.com

WARNING:TO PREVENT FIRE OR ELECTRIC SHOCK, DO NOT EXPOSE THIS APPLIANCE TO RAIN OR MOISTURE

Note to CATV system installer: This reminder is provided to call the CATV installer's attention to Article 820-40 of the NEC , which provides guidelines for proper grounding and, in particular, specifies that the cable should be connected to the grounding system of the building, as close to the point of cable entry as practical.

CAUTION: TO PREVENT ELECTRIC SHOCK DO NOT USE THIS POLARISED PLUG WITH AN EXTENSION CORD RECEPTACLE OR OTHER OUTLET UNLESS THE BLADES CAN BE FULLY INSERTED TO PREVENT BLADE EXPOSURE.

ATTENTION: POUR PREVENIR LES CHOCS ELECTRIQUES NE PAS UTILISER CETTE FICHE POLARISEE AVEC UN PROLONGATEUR, UNE PRISE DE COURANT OU UNE AUTRE SORTIE DE COURANT, SAUF SI LES LAMES PEUVENT ETRE INSEREES A FOND SANS EN LAISSER AUCUNE PARTIE A DECOUVERT.

The lightning flash with arrowhead, within an equilateral triangle is intended to alert the user of the presence of uninsulated "dangerous voltage" within the product's enclosure; that may be of sufficient magnitude to constitute a risk of electric shock to persons.

The exclamation point within an equilateral triangle is intended to alert the user of the presence of important operating and maintenance (servicing) instructions in the literature accompanying the appliance

REAR PANEL CONNECTIONS

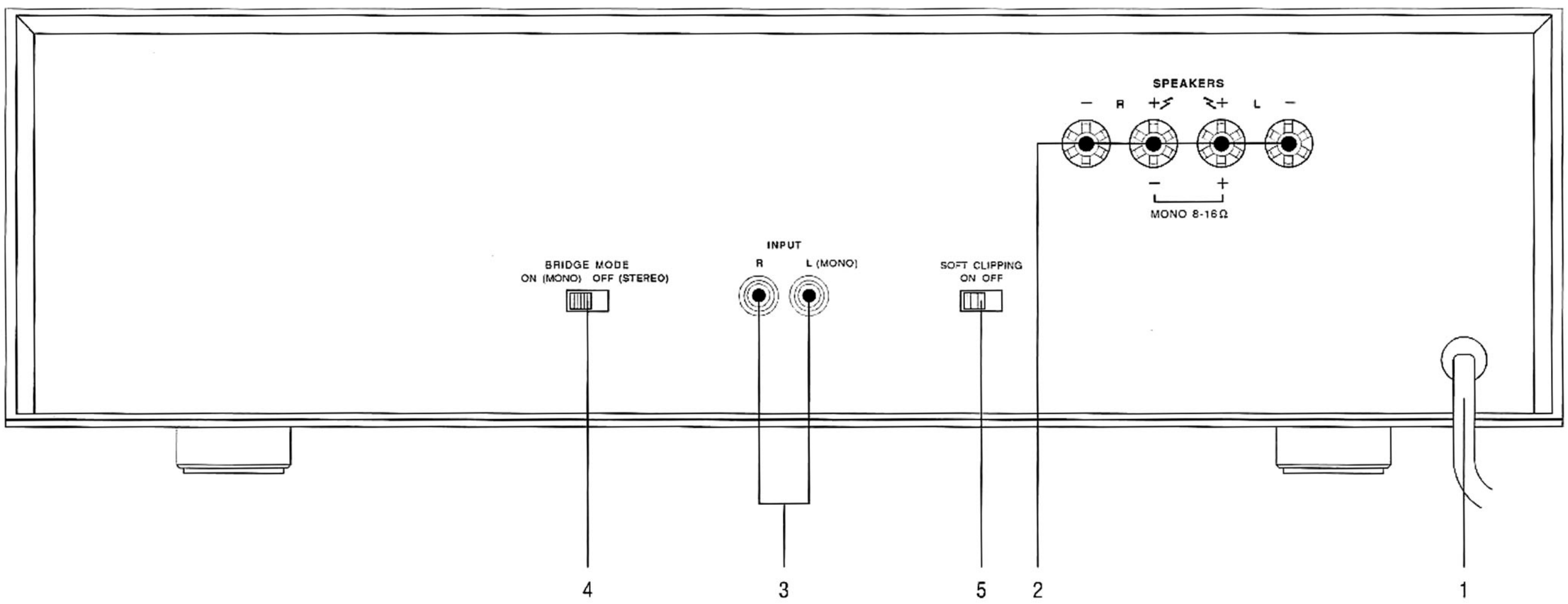

www.hifiengine.com

FRONT PANEL CONTROLS

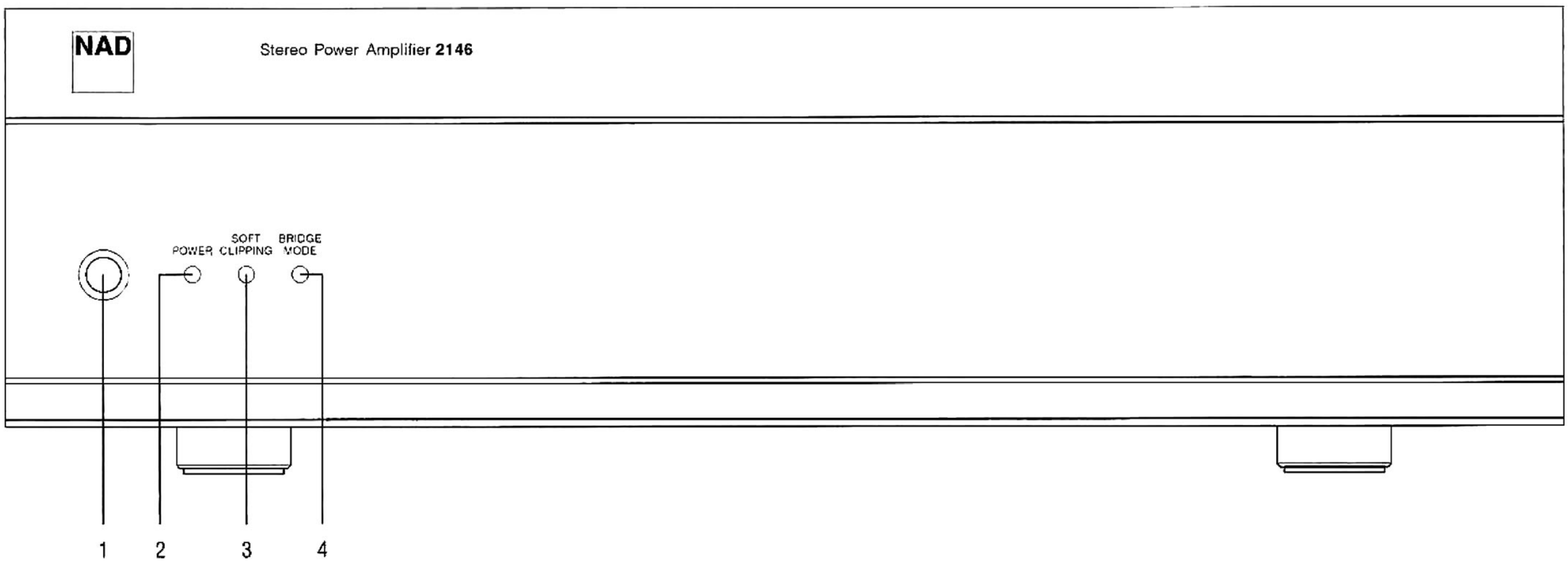

FIGURE 1.

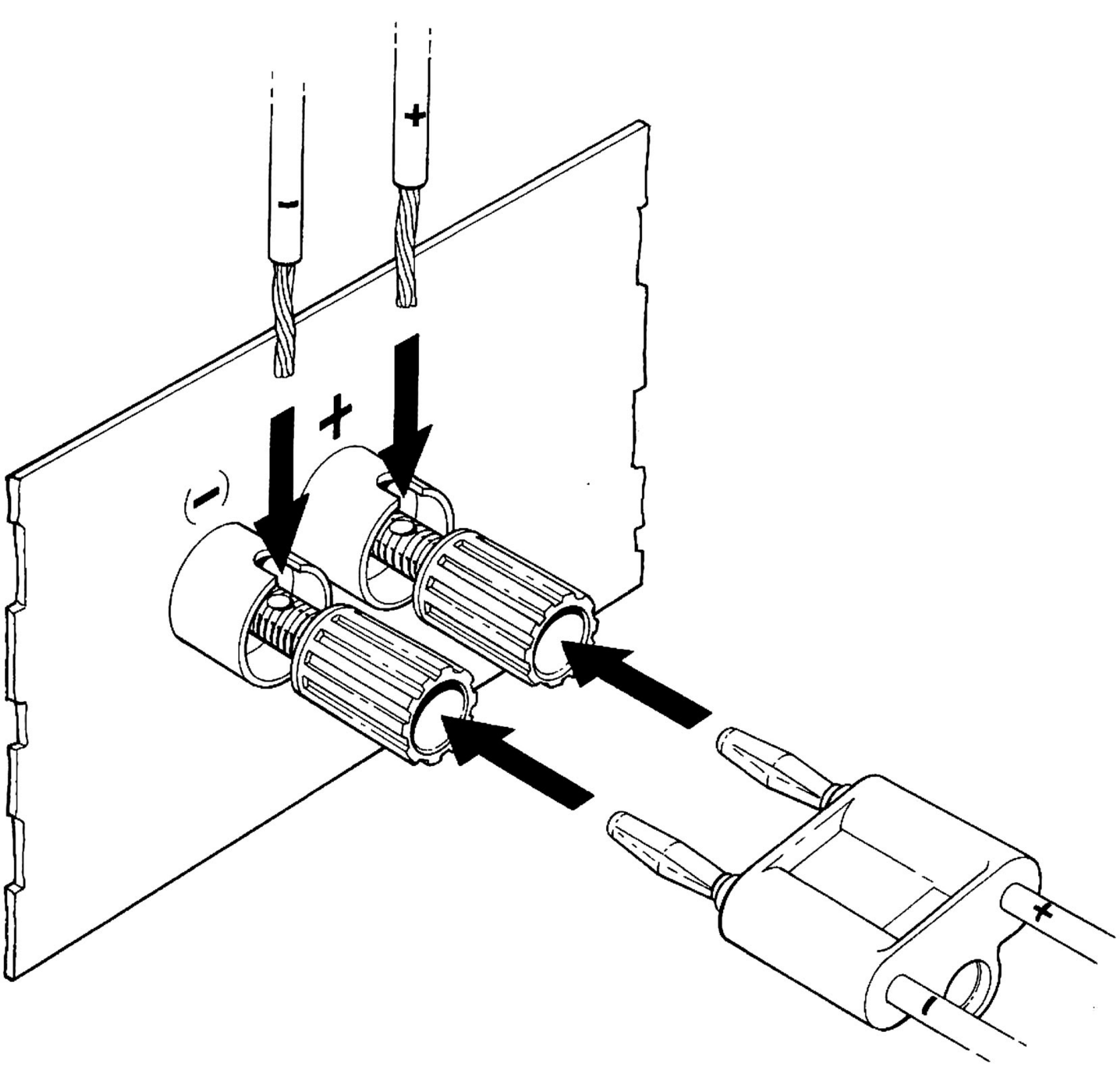

www.hifiengine.com

GB NAD 214 & 216 STEREO POWER AMPLIFIER

INSTRUCTIONS FOR INSTALLATION AND OPERATION

A NOTE ON INSTALLATION

This unit may be installed on any level surface that is strong enough to support its weight. Since its power transformer generates a significant magnetic hum field, a turntable (especially one with a moving-coil pickup cartridge) or TV set should not be located adjacent to the amplifier nor directly above it.

CAUTION: The amplifier's weight must always rest on its bottom feet. Never put the amp down on its rear panel, with its front panel facing up. Doing so risks damage to the input/output connectors.

The amplifier generates a moderate amount of heat, requiring internal ventilation. Do not permit the air-outlet grille on the top cover to be obstructed by papers or articles of clothing. If you want to locate the amplifier on a carpeted floor, place a board under the amp in order to prevent it from sinking into the carpet, blocking the air inlets on the bottom.

WARNING To prevent a fire or shock hazard, do not permit liquid or moisture to enter the amplifier. If liquid is accidentally spilled on it, immediately shut off the power and unplug the AC power cord. Allow time for complete evaporation to occur before operating the amplifier again. (If the liquid is anything but water and/or alcohol, the amplifier should be examined by a service technician before power is applied to it.)

Do not open the amplifier, or attempt to modify or repair it yourself. Refer all servicing to a qualified technician.

REAR PANEL CONNECTIONS & CONTROLS

1. AC POWER CORD

Plug the AC power cord into a live wall socket. If you must use an extension cord, select a heavy-duty cord of the type used for large electrical appliances.

Do not connect the amplifier's power cord to the accessory AC outlets on a preamplifier. Such convenience outlets are not designed to supply the high power levels, up to 400 or 600 watts, that the 214 or 216 requires. If you wish to switch your entire audio system on and off at once, plug both the 214/216 and your preamp into a "power strip" containing several AC outlets and a high-current on/off switch.

Voltage conversion. A notice printed on the rear indicates the AC power-line voltage that the amplifier requires. However every Model 214 and 216 amplifier has a "universal" power supply that can be modified easily for operation in other countries. If you wish to transport your 214 or 216 to a nation that employs a different power-line voltage, an authorised NAD dealer or service agency can convert it for such use. When you arrive at your destination you can have the appropriate AC power cord and/or plug fitted by an authorised NAD dealer or service agency for local electrical outlets.

WARNING TO UK USERS. If this appartus is not fitted with a UK three-pin plug, do not attempt to insert the attached plug into a UK mains socket. Instead, cut the plug from the mains lead and attach a fused UK three-pin plug using the following safety advice on wiring.

IMPORTANT. The wires in this mains lead are coloured **BLUE** and **BROWN**;

BLUE: NEUTRAL **BROWN: LIVE**

The colours of these mains lead wires may not correspond with the coloured markings identifying the terminals in your plug. In this case the **BROWN** wire must be connected to the terminal which is marked **L**(ive) or coloured **RED**. The **BLUE** wire must be connected to the terminal marked **N**(eutral) or coloured **BLACK.** No connection should be made to the terminal marked E or coloured green or green and yellow

2. SPEAKERS.

This amplifier is equipped with special high-current binding-post speaker terminals to handle the highest peak power levels that may occur in the "bridged" mode or with low-impedance speakers.

To connect loudspeaker cables, first switch off the amplifier's power. If your are connecting a pair of speakers for normal stereo operation, be sure that the BRIDGE MODE switch is set to OFF (STEREO).

NOTE: In some countries the terminals are protected by a hinged plastic safety cover. Remove the two screws which hold the cover in place to connect the speaker cables as instructed below. When fully opened the cover will stay in that position for ease of connection. Once the speakers have been connected, close the cover and secure the two screws again.

For best stereo imaging, the left and right speakers should be located at equal distances from your chair. To minimize the effect of speaker cables on the sound, locate the amplifier near the speakers and use short cables to connect the speakers. If your preamplifier is located at the opposite end of the room near your chair, you will need a long cable to connect it to the power amplifier. All NAD preamplifiers have the low output impedance required to drive long connecting cables.

Connect the wires from your left-channel speaker to the (L+) and (L-) SPEAKER terminals, and connect the wires from the right-channel speaker to the (R+) and (R-) terminals. In each channel the red terminal is the positive (+) output, and the black terminal is the negative (-) or "ground" terminal.

Use heavy-duty (16-gauge or thicker) stranded wire, especially with 4-ohm loudspeakers. Bare wires can be connected directly to the binding-post terminals. For a longer-lasting and more corrosion-resistant connection you may purchase speaker cables with nickel or gold-plated connectors (pin connectors,

www.hifiengine.com

spade lugs, or banana plugs), or you can install such connectors on the wires yourself. Connections to each binding post may be made in several ways, as follows. [See Figure 1.]

(1) Pin connectors. A pin connector is a slim metal shaft that is crimped or soldered onto the end of a wire. The threaded shaft of each binding post contains an opening that accepts pin connectors up to 3mm in diameter. Unscrew the red or black plastic bushing on each terminal to expose the hole in the metal shaft. Insert the pin connector through the hole, and turn the bushing clockwise until it is tight.

(2) Spade lugs. Unscrew the colored bushing, insert the U-shaped spade lug behind the bushing, and tighten the bushing down on it.

(3) Banana plugs. Insert a banana plug axially into the hollow end of each binding post after removing the inserts in the terminals. The terminals are separated by 3/4 inch (19mm), so they will accept dual-banana plugs. NOTE: Banana plugs are designed only for temporary connections, and the safety cover (not present on some versions of the 214 or 216, depending on where the amplifier was bought) cannot be closed when they are used.

(4) Bare wires. Separate the two conductors of the cord, and strip off a half-inch (1 cm) of insulation from each. In each conductor, twist together the exposed wire strands. Unscrew the red or black bushing, insert the bare wire through the hole in the metal shaft, and tighten the plastic bushing until it grasps the wire securely. Check to be sure that no loose strand of wire is touching the chassis or an adjacent terminal.

CAUTION: Potentially dangerous voltages are present on these terminals when the amplifier is producing maximum power. It is particularly important that curious children and small pets be prevented from touching the terminals.

Phasing. Stereo speakers must operate "in phase" with each other in order to produce a focused stereo image and to reinforce rather than cancel each other's output at low frequencies. An in-phase connection is assured if the red (positive) terminal on the amplifier is connected to the red (positive) terminal on the loudspeaker, in each channel.

If your speakers are easily moved, their phasing can easily be checked. Make the connections to both speakers, place the speakers face-to-face only a few inches apart, play some music, and listen. Then swap the connection of the two wires at the back of ONE of the speakers, and listen again. The connection which produces the fullest bass output is the correct one. Connect the wires securely to the speaker terminals, being careful not to leave any loose strands of wire that might touch the wrong terminal and create a partial short-circuit; then move the speakers to their intended locations.

If the speakers cannot easily be set face-to-face, then phasing must rely on the "polarity" of the connecting wires. The speaker terminals on the amplifier are identified as red (+) and black (-) in each channel. The terminals at the rear of the speakers are also marked for polarity, either via red and black connectors or by labels: "+", 1, or 8 ohms for positive, "-", 0, or G for negative. The red (+) terminal on the amplifier should be connected to the red (positive) terminal of the speaker, in each channel.

To facilitate this, the two conductors comprising the speaker wire in each channel are different, either in the color of the wire itself (copper vs. silver) or in the presence of a small ridge or rib pattern on the insulation of one conductor. Use this pattern to establish consistent wiring to both speakers of a stereo pair. Thus if you connect the copper colored wire (or ribbed insulation) to the (+) amplifier terminal in the Left channel, do the same in the Right channel. At the other end of the wire, if you connect the copper colored wire (or the ribbed insulation) to the red or positive terminal on the left-channel speaker, do the same at the right-channel speaker.

3. LEFT CHANNEL & RIGHT CHANNEL INPUTS.

Before making or changing input connections to the amplifier, make certain that the POWER is OFF.

Connect an audio interconnect from the left channel output of the preamp to the left channel input of the 214/216 and from the right channel output of the preamp to the right channel input of the 214/216. The audio interconnect's plugs are usually colour coded on both ends; white or black is normally used for the left channel, red is normally used for the right channel.

4. BRIDGE MODE ON (MONO) / OFF (STEREO).

This switch "bridges" the two channels together, forming a monophonic amplifier with more than double the output power. To convert to bridged operation, the following procedure should be followed.

(1) Switch OFF the POWER.

NOTE: in the BRIDGE MODE the loudspeaker's impedance is effectively halved as "seen" by the amplifier. An 8-ohm load looks like 4 ohms, a 4-ohm load looks like 2 ohms, and a pair of 4-ohm speakers operated in parallel will resemble a 1-ohm load. Driving paralleled low-impedance speakers to high levels will cause the amplifier to overheat and shut down, or may cause internal fuses to blow in order to protect the amplifier. For best results the bridging mode should be used with a single 4-ohm or 8-ohm speaker in each channel.

(2) Disconnect any signal cables from the input jacks. Decide whether this amplifier will be driving the Left or Right speaker. Connect the corresponding (left or right) signal cable from your preamplifier to the L input jack of this amplifier.

NOTE: In the BRIDGE MODE the amplifier is driven only through its L (left) input, even though it may be connected to the Right speaker. If another NAD

www.hifiengine.com

214 or 216 amplifier in bridged mode is used for the second stereophonic channel, it also will be driven through its L input, regardless of whether it is used to drive the Left or Right loudspeaker.

(3) Disconnect any wires from the SPEAKERS terminals. Select the wire from the speaker that will be driven by this bridged amplifier. Connect its "positive" conductor to the L+ terminal and its "negative" conductor to the R+ terminal (i.e. the two red terminals). DO NOT connect any wires to the black terminals (L- and R-).

CAUTION: In the BRIDGE MODE the speaker wires must be "floating" with respect to the circuit ground. Do NOT connect the speaker wires to anything that shares a common ground between stereo channels (such as a speaker switch or an adapter for electrostatic headphones), nor to anything which shares a common ground with the amplifier's inputs (such as a switching comparator or a distortion analyser).

(4) After the preceding conditions have been satisfied, move the BRIDGE MODE switch to ON (MONO). Finally turn the Power ON.

(5) To return the amplifier to normal stereo operation at a later date, first turn off the power. Re-set the BRIDGE MODE switch to OFF (STEREO). Restore normal Left and Right input connections, and re-connect loudspeaker wires to the speaker terminals as described above under SPEAKERS.

5. SOFT CLIPPING ON/OFF.

When an amplifier is overdriven beyond its maximum power output it normally produces "hard clipping" of the signal with harsh distortion and power-supply buzz as the output transistors saturate. The NAD Soft Clipping circuit gently limits the output waveform and minimizes audible distortion when the amplifier is overdriven. It should be switched ON when playing music at very high levels that might exceed the amplifier's power capacity. For convenience it may be left ON at all times.

FRONT PANEL CONTROLS

1. POWER ON/OFF.

Press the POWER button to turn on the amplifier. The status (POWER) LED glows green when the power is on and the amplifier is ready for use. The LED glows red briefly during turn-on and turn-off, to protect the speakers from low-frequency thumps. Press the POWER button again to switch the amplifier off. In the off position the unit is still connected to the mains. Disconnect the power cable when the unit is not to be used for a long time.

2 POWER INDICATOR (STATUS).

This multi-color LED indicates the operating status of the amplifier, as follows.

DARK: POWER off. The POWER switch may be off, the AC power cord may be unplugged or not connected to a live wall outlet, or the internal fuse may have blown.

GREEN: POWER on; the amplifier is ready for use.

RED: Protection mode; the loudspeakers have been disconnected by an internal relay. This mode is activated briefly during turn-on and turn-off, to protect the speakers from low-frequency thumps. At other times the Protection mode may be activated by severe overheating, short-circuited speaker wiring, or an internal fault.

If the Status light continues to glow red, switch the POWER OFF. When the output stage cools, relays will automatically re-connect the speakers, and normal operation can be resumed. In most cases a very slight reduction in volume level will prevent further interruptions.

If the protection relays interrupt the sound frequently, several possible causes should be considered: a loose strand of wire causing a partial short-circuit between speaker terminals, or continuous high-power operation into a very low impedance in the Bridged mode, or any obstruction of the free flow of air that is needed to ventilate the amplifier and dissipate its heat. If the protection system interrupts the sound even when the amplifier is cool, return the amplifier to your NAD dealer for service. The protection relays may be disengaging to protect your speakers from a circuit fault, such as an improper DC voltage at the speaker terminals.

3. SOFT CLIPPING INDICATOR.

This amber LED glows when the SOFT CLIPPING switch (on the rear panel) is ON. Refer also to chapter "REAR PANEL CONNECTIONS AND CONTROLS", section 5, "SOFT CLIPPING" for more information.

4. BRIDGE MODE INDICATOR.

This amber LED glows when the BRIDGE MODE switch (on the rear panel) is ON (MONO). Refer also to chapter "REAR PANEL CONNECTIONS AND CONTROLS", section 4, "BRIDGE MODE ON (MONO) / OFF (STEREO)" for more information.

A NOTE ON PROTECTION

This amplifier can safely and cleanly drive complex speaker impedances to maximum levels exceeding hundreds of watts with wide-range musical signals. But it may overheat if called upon to deliver full power continuously into a low impedance. Newly designed circuits constantly monitor critical voltages and currents in the amplifier's output stage. Unlike old-style transistor "protection" circuits, which tend to limit current and cause distortion when driving complex

www.hifiengine.com

impedances, NAD's sophisticated protection system operates as follows.

A relay disconnects both loudspeakers if a condition is detected that might endanger either the speakers or the amplifier itself — severe overheating, significant DC voltage at the speaker terminals, excessive output voltage or current, a short-circuited speaker connection, or an internal circuit fault. If both channels of sound go silent and the Status light turns red, the Protection mode has been activated.

To resume operation, simply turn off the amplifier and wait a minute or two for the output stage to cool, and the relays will re-set automatically. Then you may turn the amplifier on again. In most cases you can prevent further interruptions in the sound by reducing the volume level just slightly.

If the Protection system interrupts the sound often, several likely causes should be considered: papers or cloth obstructing the ventilation grille in the amplifier's cover, or a loose strand of wire causing a partial short-circuit between speaker terminals, or an attempt to drive low-impedance speakers (particularly in the BRIDGE MONO mode).

IN CASE OF DIFFICULTY:
A TROUBLE-SHOOTING GUIDE

SYMPTOM	POSSIBLE CAUSE
No sound.	Power not on.
	AC line cord unplugged or not connected to a live wall socket.
	The Protection mode has been engaged to protect the amplifier from short-circuited speaker wires or from overheating caused by overdriving the ampli fier into a low impedance. (To resume operation, switch the POWER OFF and allow the amplifier to cool). Internal fuse blown; return amplifier to dealer for service.
No sound in one channel	Speaker cable pulled loose. Check all connections, both at the speakers and at the amplifier.
	Input cable pulled loose or making poor contact in socket. Rotate RCA phono plugs in input sockets to restore good contact.
	Short-circuit or broken wire in a defective input cable. Wiggle cables, especially where they enter plugs (at the preamp and at the amplifier).
Weak bass; poor stereo imaging.	Loudspeakers wired out of phase. Swap connections at the back of ONE speaker.
	BRIDGE MODE switch set to ON (MONO) while speakers are connected for stereo operation. Re-set the BRIDGE MODE switch to OFF (STEREO).

www.hifiengine.com